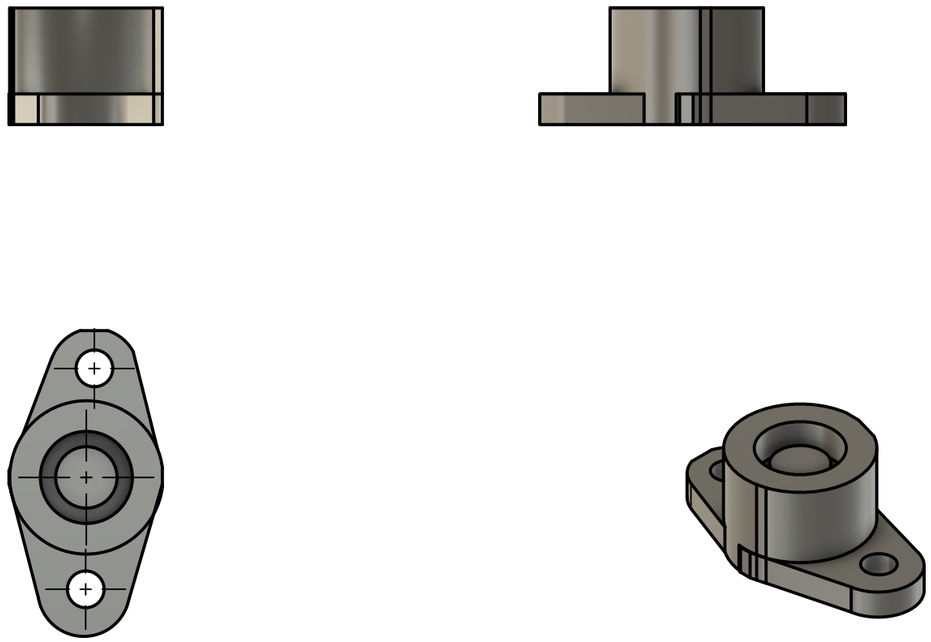

Dept.	Technical reference	Created by Sasirekha B 18-03-2026	Approved by	
		Document type	Document status	
		Title exp 4.1	DWG No.	
			Rev. / Date of issue	Sheet 1/1